Quick Start Guide
Universal Single Ended Amplifier version 2c

The Universal Single Ended Amplifier (USEA) is a two stage non-inverting Voltage input–Voltage output amplifier. The USEA is designed for use with light sensors, O2 sensors, sound level meters, or any sensor that produces a small voltage that must be amplified to a higher level for interface to a data logger or control system. A special version of the USEA also includes provision for an offset from zero, for sensors such as Net Radiometers that produce signals that can be of either polarity.

The USEA usually comes with a calibration tag affixed to the side that shows the factory preset gain in units of volts per volt. The gain factor can be set at the time of ordering, or it can be set later, or changed by the user on site. Two internal switches allow the user to select a range of gain factors from x1 to x1500. At high gain settings it features a CAZ (Commutating Auto Zeroing) operational amplifier to achieve low input offset voltage of less than 5 microvolts, for amplification of small signals. The USEA version 2c includes a circuit that allows it to pull down closer to zero than previous versions.

Connections:

The only tool required is a 3.8 mm or 0.15" slot screwdriver. To gain access to the interior of the enclosure, loosen the captive screws at the two corners and lift up the top. Refer to the connection diagram below.

a) SENSOR TO USEA INPUT: Pass the sensor cable through the cable gland nearest the 2-terminal (Black/White) connection block. Loosen the gland nut if necessary. Connect as follows:

- Black terminal to the sensor (-) signal, ground. If the sensor has a shield wire, it too can connect to this terminal.
- White/green terminal to the sensor (+) signal

b) POWER SUPPLY AND SIGNAL OUTPUT: Pass a 3-core cable (you supply) through the USEA cable gland nearest the 3-terminal connection block. Connect as follows:

- Black terminal on USEA to cable ground, common to power and signal output.
- Green terminal on USEA to cable signal wire, signal output to external equipment.
- Red terminal on USEA to power supplied by external equipment, 5 to 15 Volts DC, 2 mA.
  The power supply voltage must be at least one volt above the expected full scale output voltage.
  Special USEA components are available for special range or power supply requirements, for example,
  the USEA for the ONSET HOBO logger has special components for operation from 2.5 Volt power at 100 µA.

Recheck and be sure all wires are clamped solidly in place. Tighten the gland nuts on both ends, and if necessary to achieve a tight seal in the gland, add tubing to increase the cable diameter. Replace the top cover on the enclosure and tighten the corner screws. Take care not to over tighten the cover screws as this may cause the cover to deform or "saddle" which can compromise the seal.

USEA inside

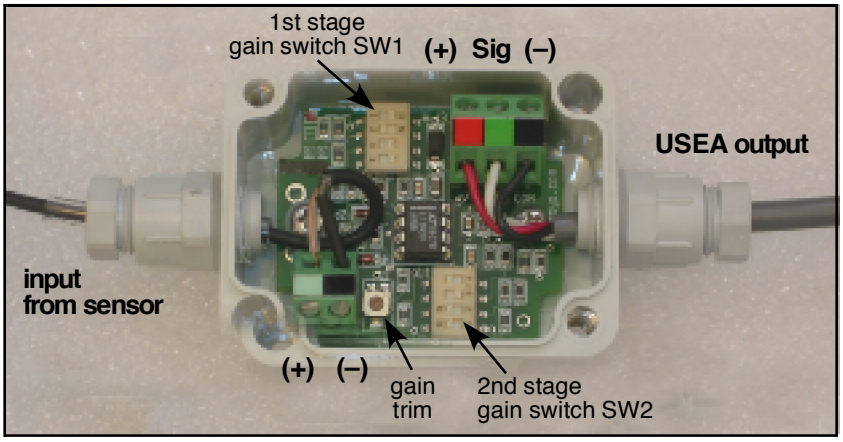

Calculate Signal Level:

The USEA's output voltage is proportional to its input voltage. You will have to program your equipment with the following formula, or enter this formula for post-processing in a program such as Microsoft EXCEL™.

$$\textbf{Signal Level} = \frac{\textbf{(USEA Volts output)} * \textbf{(SENSOR calibration multiplier)}}{\textbf{(USEA gain factor)}}$$

The **USEA gain factor** is used to calculate back from the USEA output voltage to find the voltage actually produced by the sensor. An example USEA gain factor label is shown to the right, where the USEA gain factor is 50. The USEA gain factor can range from 1 to 1500. The **calibration multiplier** is used to convert the sensor output into the engineering units of interest; this might be a light level, a chemical concentration, a sound level etc. Please consult your sensor documentation for the specific unit conversion formula. The conversion formula might be more complicated than the one shown above. Observe the power supply ratings specific to each amplifier.

gain= **50**
offset= **0**
Vout=(Vin*gain)+offset
power= 5 - 15 Vdc

The USEA may also include an offset. Instruments such as net radiometers measure both incoming and outgoing radiation and produce both positive and negative voltages. To account for this the USEA can be made with an offset. The label to the right indicates a gain of 50 and an offset of 2.5 Volts. When there is zero signal, the USEA amplifier output in this case is 2.5V and negative and positive inputs decrease and increase the output around the offset. Other fixed offsets are available.

gain= **500**
offset= **2.50V**
Vout=(Vin*gain)+offset
power= 5 - 15 Vdc

Troubleshooting:

1) USEA appears to be dead; the output voltage is stuck at zero or full scale regardless of signal level:
1a) Check the screw terminal connections, make sure all of the wires are clamped solidly in place and that no wires are broken, and that all are in the correct locations, and that the USEA has power in the specified range.
1b) Although the USEA is protected against excess or reversed power supply voltages, it can not be expected to survive catastrophic extremes such as a lightning strike or connection to AC power lines.
1c) Check for evidence of water entry or condensation in the enclosure. The enclosure is sealed and rated NEMA 4, but it is best to keep it in a protected location. Position it with lid face up if it will be exposed to spray, and loop the wires so that water will not run up against the gland nuts. Do not over tighten the top screws. Use a pack of silica gel desiccant inside. If the cables are small, use tubing to expand their diameter for a tight fit in the glands.
2) Amplifier seems to be responding to the signal, but the output seems too low or too high:
2a) Be sure you are using the correct multiplier in your calculations. (Is it possible the switch setting was changed?)
2b) Place sensor in known conditions to test.
2c) The output impedance of the USEA amplifier is 1000 Ohms ±1%. The input impedance of downstream equipment should be high, 10 MOhms or greater, and if not, the 1000 Ohms will have to be factored into the calculation. The output resistor helps to protect the amplifier from mis-use.
2d) Check the power supply. It must be at least 1V greater than the expected output voltage. (except HOBO version)
3) The amplifier output is unstable or the readings fluctuate under constant conditions:
3a) The power supply should be filtered direct current.
3b) Avoid routing the sensor cables next to AC power lines or next to halide lamps, refrigeration equipment or other AC power equipment, or radio transmitters. Long sensor cables may benefit from shielding. Connect the shield to ground (black input terminal).

Switch and trimmer settings for gain:

USEA2 gain factors are expressed as Volts per Volt and are shown in the main body of the table on the following page. Gains can be set from 1 V/V to 2250 V/V First stage voltage gain is set using DIP switch SW1 for gain factors from 1 to 50 (rows). Second stage voltage gain is set using DIP switch SW2 to gain factors from 1 to 45 (columns). The overall gain at the intersection of row and column is the product of the first stage times the second stage gains. Positions on each DIP switch are numbered 1,2,3,4 from least to most significant bit. E.g. 1110 has positions 4, 3 2 set to ON, and position 1 set to OFF. If there is a choice of two settings that produce the same gain, it is usually better to choose the one that is highest in the first stage. The trimmer sets the exact gain once the switches are in place. For best results the trim should be readjusted any time the switch positions are changed. The op-amp used in the circuit depends on the gain and also on the power supply requirements. For most purposes the ope-amp will be either an LTC1051, and LT1490 or an LTC2055. Offset when used is added at the factory and is not adjustable in the field.

Table for gain setting switches SW1 and SW2. See text.

	SW2	1111	1110	1101	1100	1011	1010	1001	1000
SW1	gain	1	2	3	4	5	6	7	8
1111	1	1.000	2.000	3.000	4.000	5.000	6.000	7.000	8.000
1110	2	2.000	4.000	6.000	8.000	10.000	12.000	14.000	16.000
1101	3	3.000	6.000	9.000	12.000	15.000	18.000	21.000	24.000
1100	4	4.000	8.000	12.000	16.000	20.000	24.000	28.000	32.000
1011	5	5.000	10.000	15.000	20.000	25.000	30.000	35.000	40.000
1010	6	6.000	12.000	18.000	24.000	30.000	36.000	42.000	48.000
1001	7	7.000	14.000	21.000	28.000	35.000	42.000	49.000	56.000
1000	8	8.000	16.000	24.000	32.000	40.000	48.000	56.000	64.000
0111	15	15.000	30.000	45.000	60.000	75.000	90.000	105.000	120.000
0110	20	20.000	40.000	60.000	80.000	100.000	120.000	140.000	160.000
0101	25	25.000	50.000	75.000	100.000	125.000	150.000	175.000	200.000
0100	30	30.000	60.000	90.000	120.000	150.000	180.000	210.000	240.000
0011	35	35.000	70.000	105.000	140.000	175.000	210.000	245.000	280.000
0010	40	40.000	80.000	120.000	160.000	200.000	240.000	280.000	320.000
0001	45	45.000	90.000	135.000	180.000	225.000	270.000	315.000	360.000
0000	50	50.000	100.000	150.000	200.000	250.000	300.000	350.000	400.000

	SW2	0111	0110	0101	0100	0011	0010	0001	0000
SW1	gain	10	15	20	25	30	35	40	45
1111	1	10.000	15.000	20.000	25.000	30.000	35.000	40.000	45.000
1110	2	20.000	30.000	40.000	50.000	60.000	70.000	80.000	90.000
1101	3	30.000	45.000	60.000	75.000	90.000	105.000	120.000	135.000
1100	4	40.000	60.000	80.000	100.000	120.000	140.000	160.000	180.000
1011	5	50.000	75.000	100.000	125.000	150.000	175.000	200.000	225.000
1010	6	60.000	90.000	120.000	150.000	180.000	210.000	240.000	270.000
1001	7	70.000	105.000	140.000	175.000	210.000	245.000	280.000	315.000
1000	8	80.000	120.000	160.000	200.000	240.000	280.000	320.000	360.000
0111	15	150.000	225.000	300.000	375.000	450.000	525.000	600.000	675.000
0110	20	200.000	300.000	400.000	500.000	600.000	700.000	800.000	900.000
0101	25	250.000	375.000	500.000	625.000	750.000	875.000	1000.000	1125.000
0100	30	300.000	450.000	600.000	750.000	900.000	1050.000	1200.000	1350.000
0011	35	350.000	525.000	700.000	875.000	1050.000	1225.000	1400.000	1575.000
0010	40	400.000	600.000	800.000	1000.000	1200.000	1400.000	1600.000	1800.000
0001	45	450.000	675.000	900.000	1125.000	1350.000	1575.000	1800.000	2025.000
0000	50	500.000	750.000	1000.000	1250.000	1500.000	1750.000	2000.000	2250.000

USEA2 Schematic:

The information contained herein is provided as an aid to resolving questions about the amplifier and its application. It is not meant for general distribution and remains the exclusive property of EME Systems.

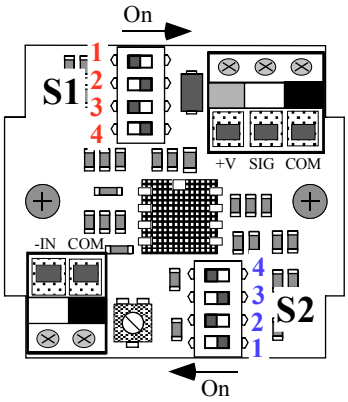

USEA rev 2 June 2009, from UTA07h
EME Systems, 2229 Fifth St., Berkeley CA 94710
tel: (510) 848-572, fax: (510) 848-5748
www.emesystems.com, info@emesystems.com

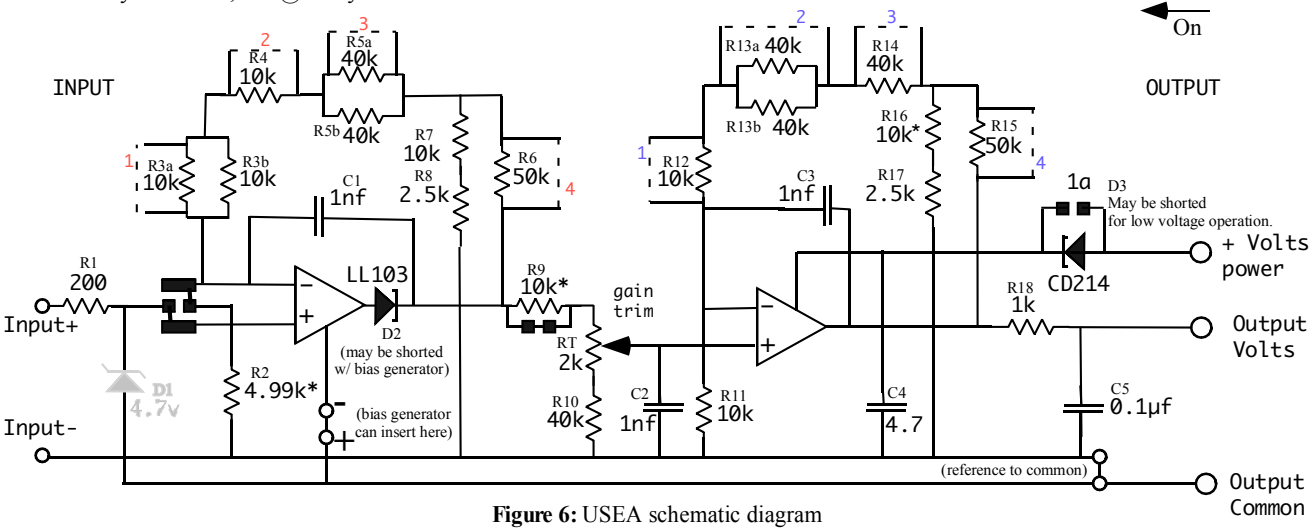

Figure 6: USEA schematic diagram

Switches are represented as dashed lines, and are either open or closed to include or short the parallel resistor(s).
Switches on input stage select gains from x1 to x50 Volts per Volt
Switches on output stage select voltage gains from x1 to x45 Volts per Volt.
Composite gains from x1 to x2250 Volts per Volt.
High gain settings use split T feedback.
Final gain setting is adjusted with trimmer RT.

Resistor R9 is usually jumpered (zero ohm), or is adjusted in order to meet a specific gain requirement.
or likewise resistor R2 value may be decreased at the factory to trim the range of gains covered by RT.
Diode D2 may be removed at the factory and zero offset is improved with a bias generator.
Diode D1 is be removed when offset is used.
Offset is applied by lifting the reference node off ground for sensors such as net radiometer or heat flux sensor.
A voltage regulator for the power supply pf up to 30 volts may replace diode CD214.
Special… for Onset HOBO® and low voltage operation, jumper 1a shorts diode CD214.

Op amps for this circuit are socketed to allow field replacement and also to allow substitution of alternative op amps for special purposes: low light levels, special supply voltages or micro-power, high speed operation, dual output. Some special options my also entail changes to gain or compensation components.
Standard gain op amp:
LT1490I: 220µVos, 4naIb, 200khz GBP, r-r i/o, 2V–44V, 100µa power, PSRR=98db
LT1078I: 70µVos, 6na Ib, 200khz GBP, output to Vd-0.8V, 5V–44V 100µa power, PSRR=114db
Low offset high gain highest accuracy CAZ op amp:
LTC1051: 1µVos, 15pa Ib, 2.5mhz GBP, output to Vd-1.5V, 5V–16V 2ma power, PSRR=140db
LTC2055HV: Similar to the LTC1051, but operates on lower power supply voltage and current (down to 2.5 V 100µA).
Higher speed:
TLV2462: 500µVos, 1na Ib, 6.4mhz GBP, r-r i/o, 2.7V–5.5V, 1ma power, PSRR=95db.
LTC6241: 125µVos, 1pA Ib, 18mhz GBP, r-ro, 2.8V-11V, 3ma power, PSRR=104dB, low noise CMOS, also adjust capacitors.
Offset is typically applied with a TLE2425 2.5V reference virtual ground chip, or with an LT6650 or LT1790 reference.
Bias generator is typically applied from LM7705 bias generator module.